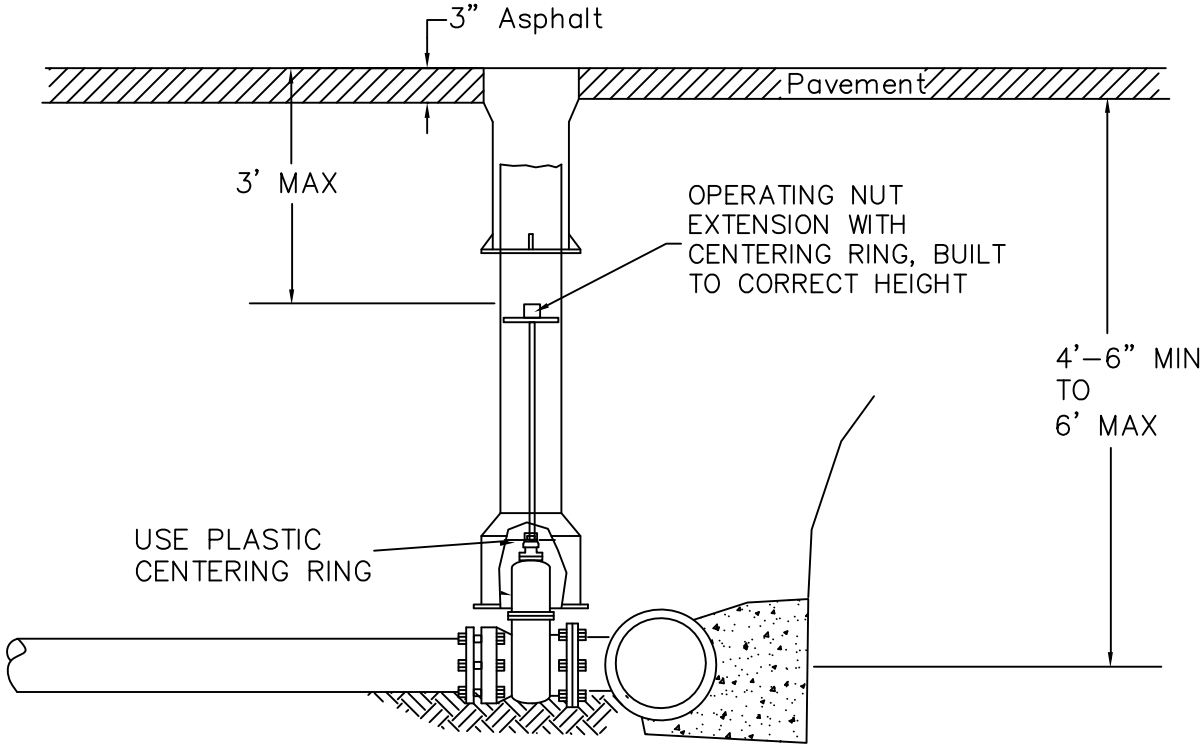

GATE VALVE
EXTENSION

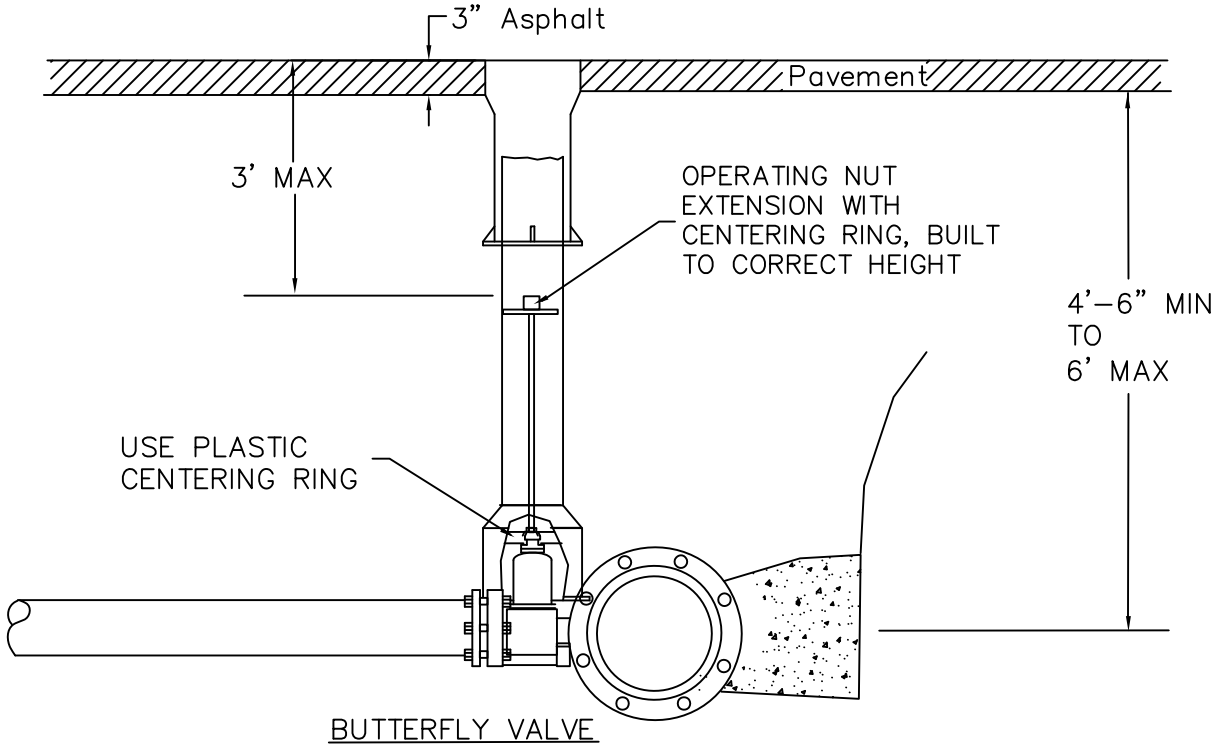

BUTTERFLY VALVE
EXTENSION

REVISION	APPROVED	DATE	CITY OF COEUR d'ALENE STANDARD DRAWING	APPROVED BY:
			VALVE OPERATING NUT EXTENSION	CITY ENGINEER, PE 7432 — DATE: 4/20/15
				DWG NO. W-29