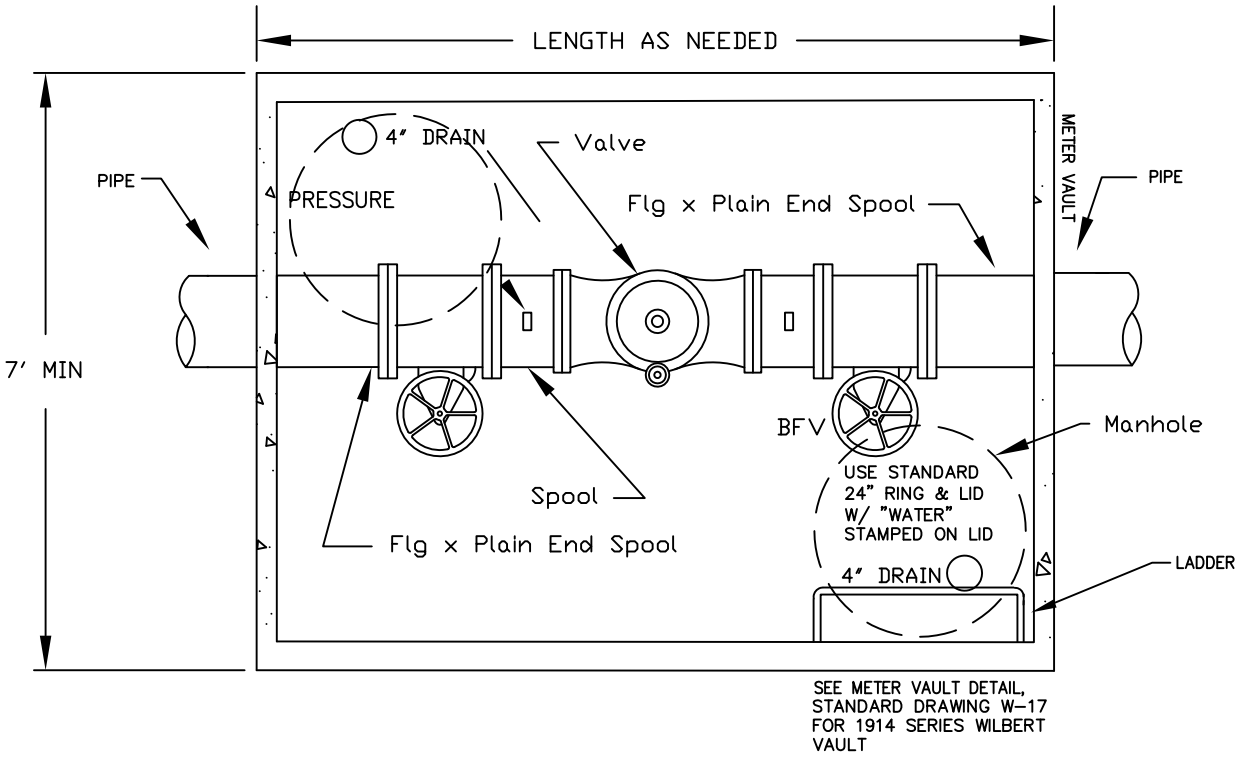

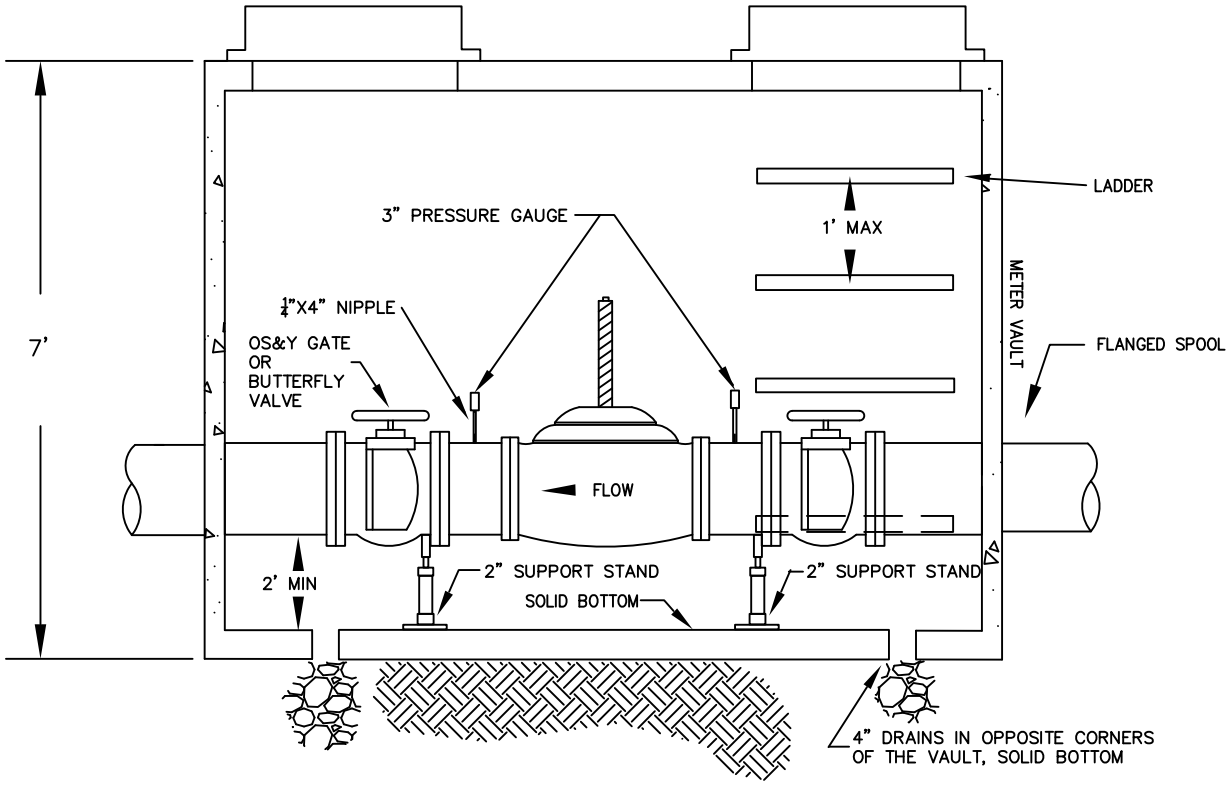

PLAN VIEW

REVISION	APPROVED	DATE

CITY OF COEUR d'ALENE STANDARD DRAWING

PRESSURE SUSTAINING VALVE ASSEMBLY

APPROVED BY:

CITY ENGINEER, PE 7432

DATE: 4/20/15

DWG NO. W-18