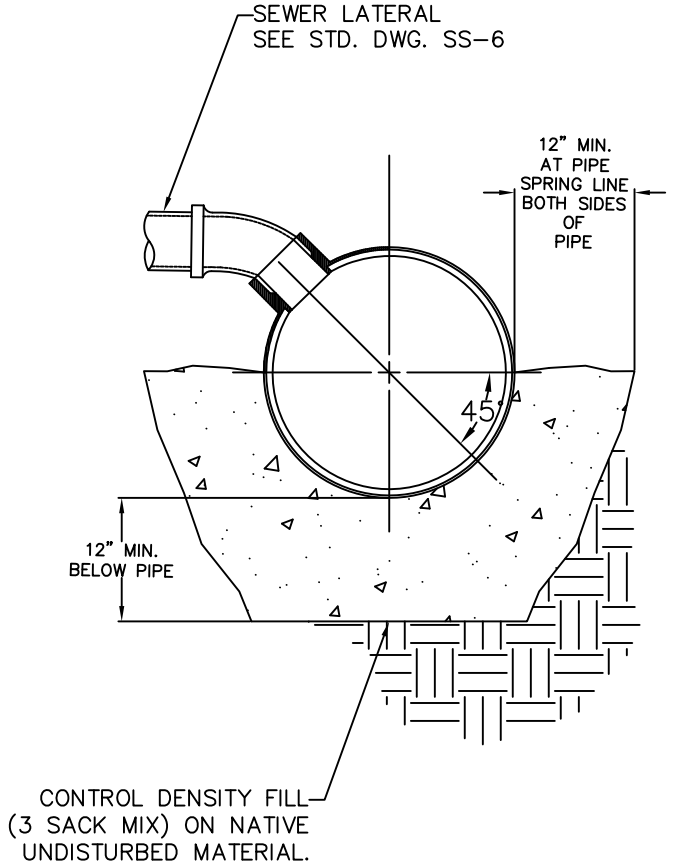

NOTES THIS DETAIL:

1. TAP SADDLES ARE ONLY USED WHEN TAPPING A NEW LATERAL ONTO AN EXISTING PUBLIC SEWER MAIN AND MUST BE PRE-APPROVED BY THE CITY.
2. ALL SADDLES SHALL BE DESIGNED TO BE USED ON THE OUTSIDE DIAMETER OF THE PUBLIC SEWER MAIN ENCOUNTERED AND NEW LATERAL ONLY.
3. A MINIMUM OF TWO (2) STAINLESS STEEL (SERIES 300 OR BETTER) THREADED STRAPS CAPABLE OF A MINIMUM OF 60 LBS. TORQUE SHALL BE USED TO SECURE SADDLE TO PUBLIC SEWER MAIN. GLUED OR CEMENTED SADDLES WILL NOT BE ALLOWED.
4. ALL TAPS SHALL BE ORIENTATED AT A MINIMUM 45° ANGLE FROM EXISTING SEWER MAIN SPRING LINE (ABOVE HORIZONTAL) UNLESS SPECIFIED OTHERWISE BY THE CITY. NO TAPS ON CROWN OF PIPE WILL BE ALLOWED.
5. ALL TAPS INTO EXISTING PUBLIC SEWER MAIN MUST BE CLEAN CUT BY DRILLING OR CORING METHOD ONLY. NO "BREAK-IN" OR HAMMERING TAPS WILL BE ALLOWED. PRESENT CORE COUPON FOR INSPECTION AS REQ'D.
6. WRAP EXISTING PUBLIC SEWER MAIN AND NEWLY INSTALLED SADDLE WITH PLASTIC PRIOR TO PLACING CONTROL DENSITY FILL (CDF).

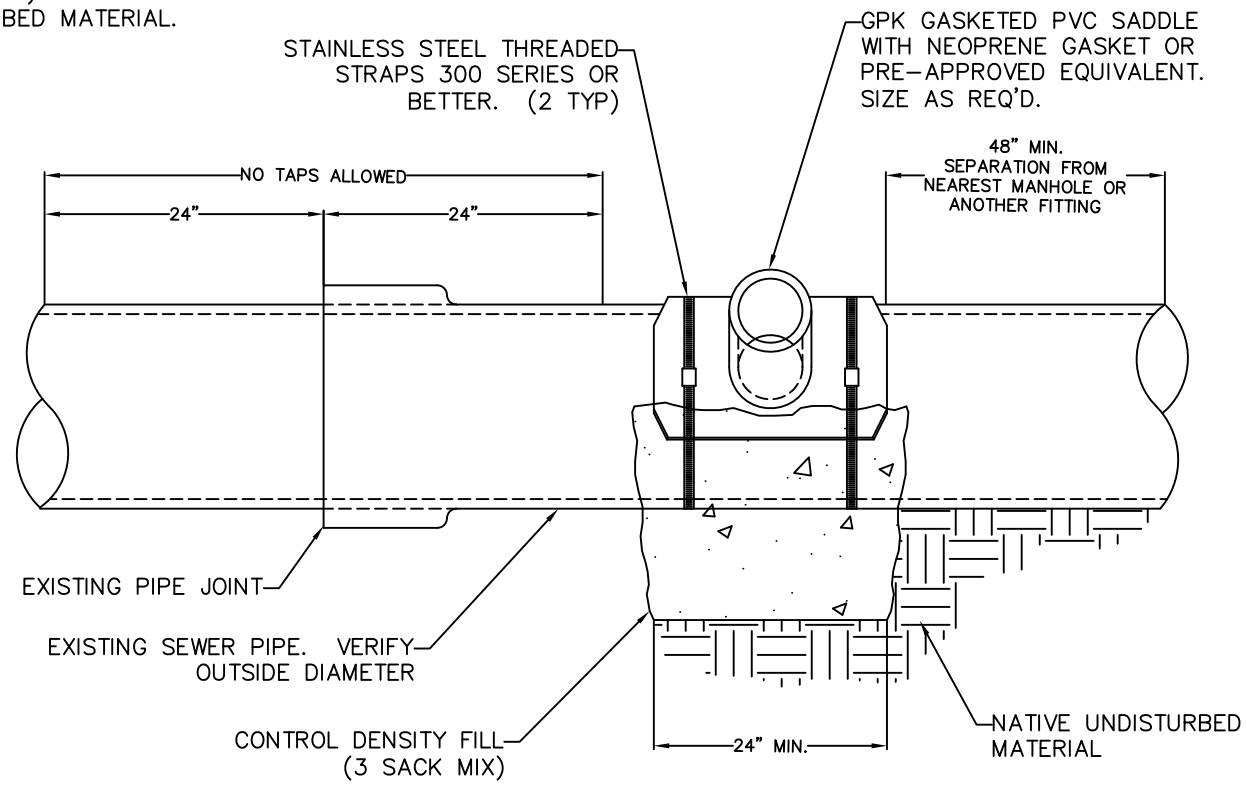

REVISION	APPROVED	DATE

CITY OF COEUR d'ALENE STANDARD DRAWING

SEWER TAPPING SADDLE

APPROVED BY:

CITY ENGINEER, PE 7432

DATE: 4/20/15

DWG NO. SS-8