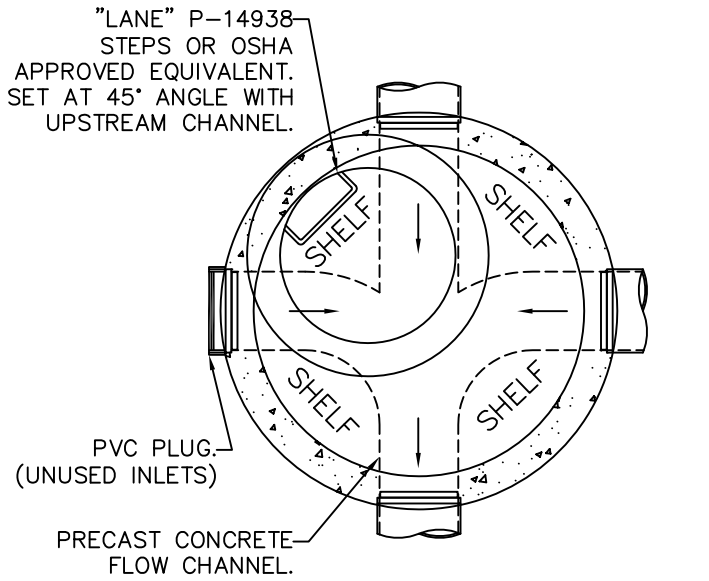

NOTES THIS DETAIL:

1. MANHOLE INSIDE DIAMETERS SHALL BE 48" FOR PIPE DIAMETERS 24" OR LESS, 60" FOR ANY PIPE DIAMETER GREATER THAN 24" AND/OR MANHOLE DEPTHS GREATER THAN 25'.
2. MINIMUM MANHOLE WALL DISTANCE BETWEEN PIPE OPENINGS SHALL BE 16" OR GREATER.
3. THE INVERT ELEVATIONS FOR STRAIGHT THROUGH MANHOLES SHALL HAVE 0.10' FALL FROM INLET TO OUTLET. MANHOLES WITH BENDS OR CHANGE IN DIRECTION SHALL HAVE 0.15' FALL BETWEEN THE INLET AND OUTLET. FIELD VERIFY PRIOR TO BACKFILLING.
4. ALL PIPE PENETRATIONS SHALL BE WATERTIGHT SAND COLLAR OR APPROVED EQUIVALENT.
5. THICKENED COLLARS SHALL BE INSPECTED DURING INSTALLATION AND SHALL BE CONSTRUCTED WITH COMPACTED SP-III ASPHALT OR CONTROL DENSITY FILL. SEE DETAIL SS-4.
6. FRAME AND COVER SHALL BE ADJUSTED TO FINISH SURFACE ELEVATION USING SOLID CONCRETE MANHOLE GRADE RINGS AND BRICKS. WOOD OR BIODEGRADABLE MATERIALS WILL NOT BE ACCEPTED. ALL JOINTS SHALL BE WATERTIGHT AND GROUTED.
7. SECURE C.I. FRAME ON FULLY DEPRESSED RAMNECK OR APPROVED EQUIVALENT AND SET 1/4" BELOW FINISH SURFACE ELEVATIONS PRIOR TO PAVING.

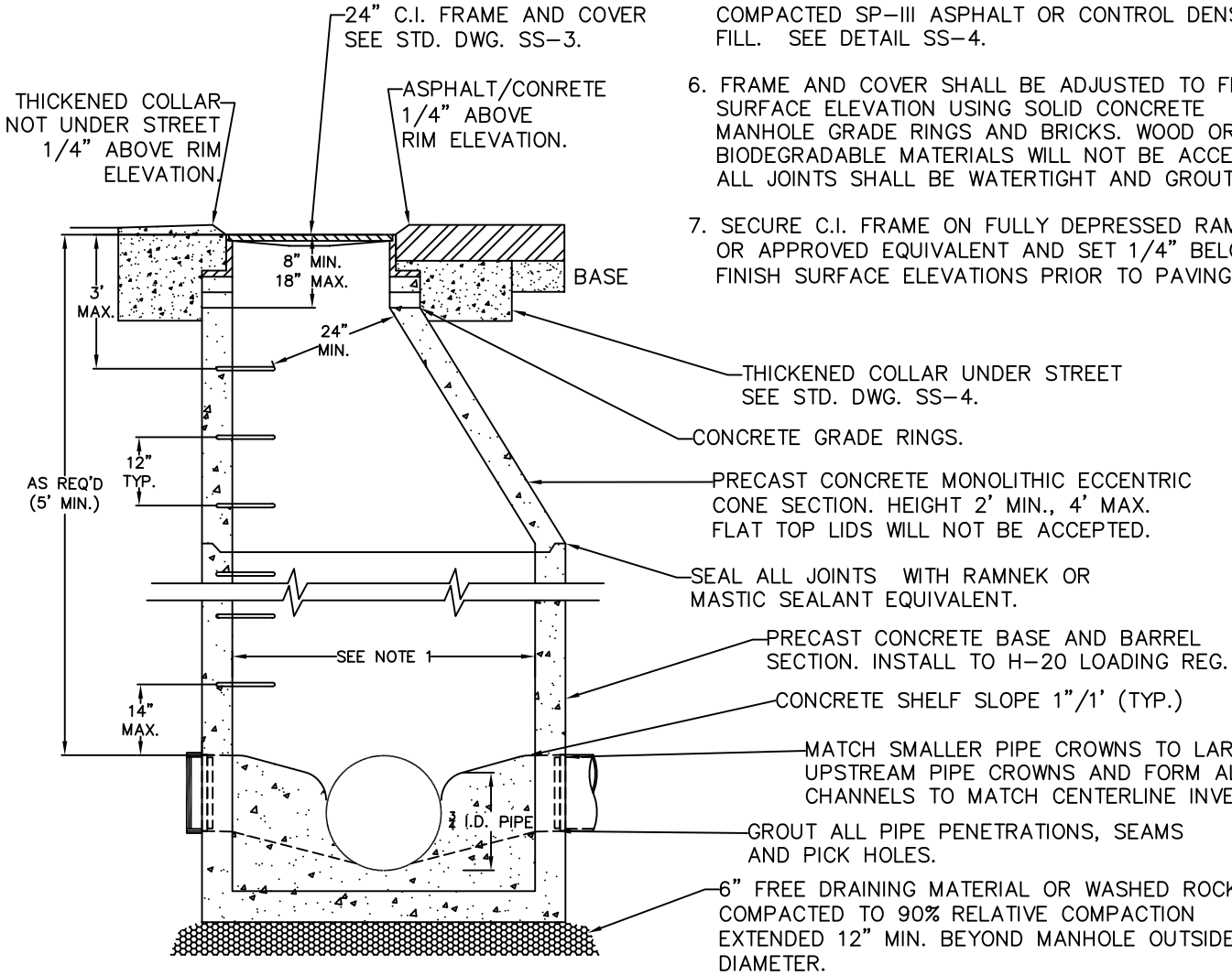

REVISION	APPROVED	DATE
		5/31/07
		7/18/07
		3/27/14
		3/31/15

CITY OF COEUR d'ALENE STANDARD DRAWING

STANDARD SEWER MANHOLE

APPROVED BY:

CITY ENGINEER, PE 7432

DATE: 4/20/15

DWG NO. SS-1