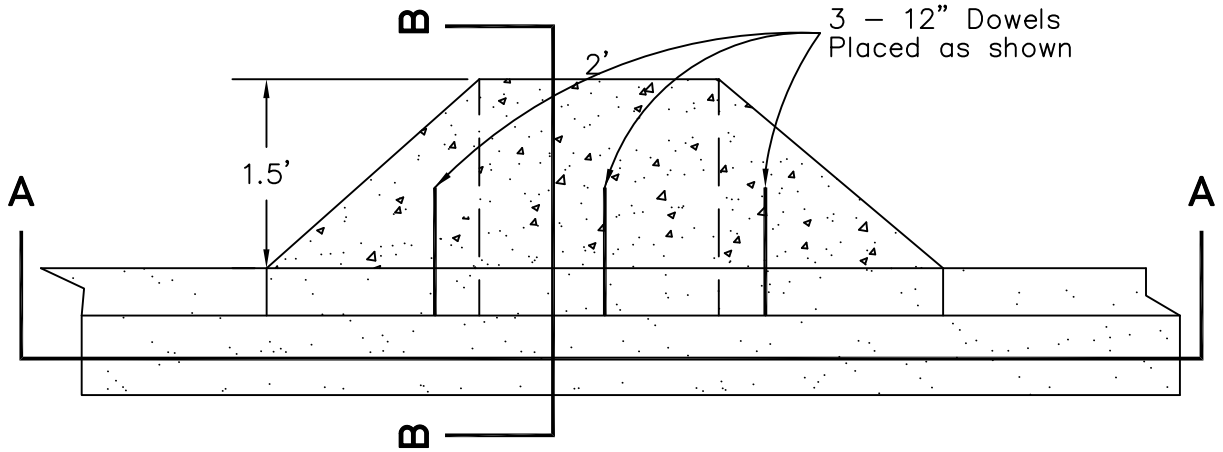

PLAN VIEW
no scale

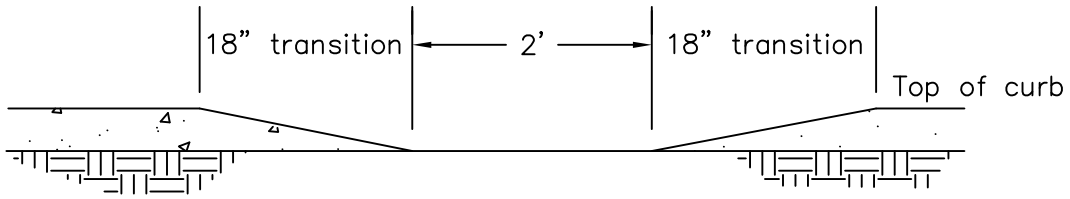

SECTION A-A

no scale

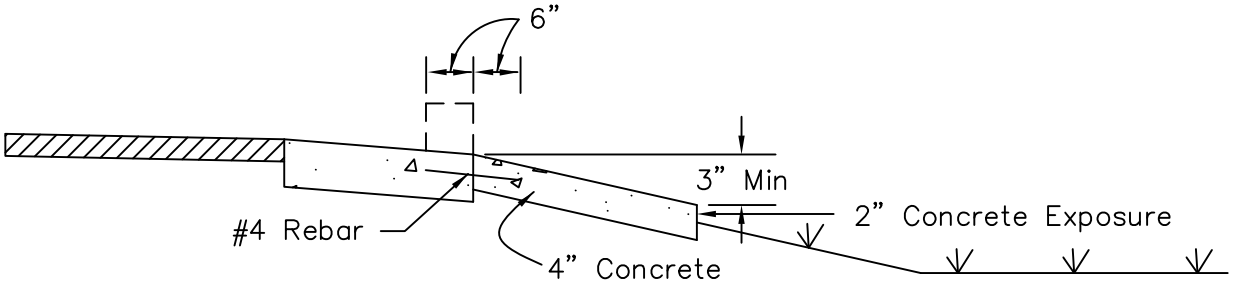

SECTION B-B

no scale

REVISION	APPROVED	DATE
1. Note 1 deleted		

CITY OF COEUR d'ALENE STANDARD DRAWING

INLET APRON

APPROVED BY:

CITY ENGINEER, PE 7432

DATE: 4/20/15

DWG NO. C–17