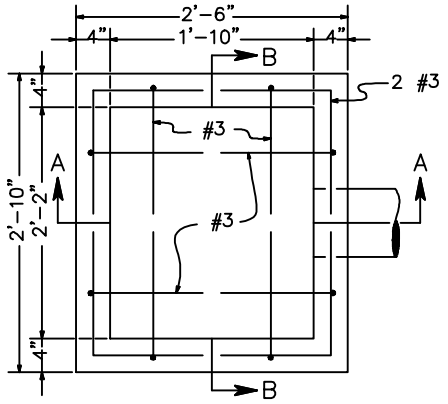

PLAN

PIPE Ø	"H"
12	1'-8 1/2"
15	2'-0"
18	2'-3"
21	2'-6"
24	2'-9"

TABLE

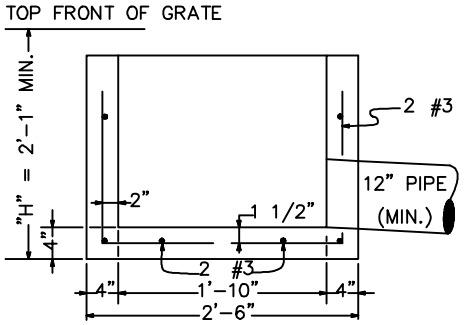

SECTION A-A

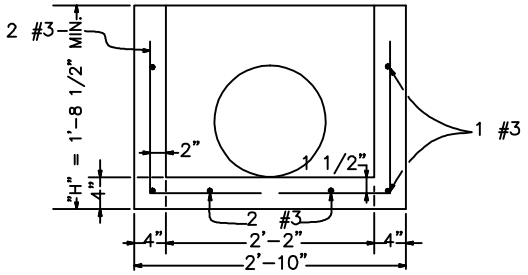

SECTION B-B

PRECAST UNIT

GENERAL NOTES

1. CONCRETE INLET SHALL BE CONSTRUCTED IN ACCORDANCE WITH ASTM C 478 (AASHTO M 199) & ASTM C 890 UNLESS OTHERWISE SHOWN ON PLANS OR NOTED IN THE PROJECT SPECIAL PROVISIONS.
2. REINFORCING STEEL SHALL BE GRADE 40 OR GRADE 60.
3. CONCRETE INLETS SHALL BE SET ON A COMPACTED OR UNDISTURBED LEVEL FOUNDATION.
4. AS AN ACCEPTABLE ALTERNATE TO REBAR, WELDED WIRE FABRIC HAVING A MINIMUM AREA OF .12 SQUARE INCHES PER FOOT MAY BE USED. WELDED WIRE FABRIC SHALL COMPLY TO ASTM A 497 (AASHTO M 221). WIRE FABRIC SHALL NOT BE PLACED IN THE KNOCKOUTS.
5. "H" SHALL BE SHOWN ON CONSTRUCTION PLANS.
6. INLET PIPE SHALL BE GROUTED INTO CONCRETE INLET.

REVISION	APPROVED	DATE

CITY OF COEUR d'ALENE STANDARD DRAWING

CURB INLET BOX TYPE 1

APPROVED BY:

CITY ENGINEER, PE 7432

DATE: 4/1/08

DWG NO. SD-9