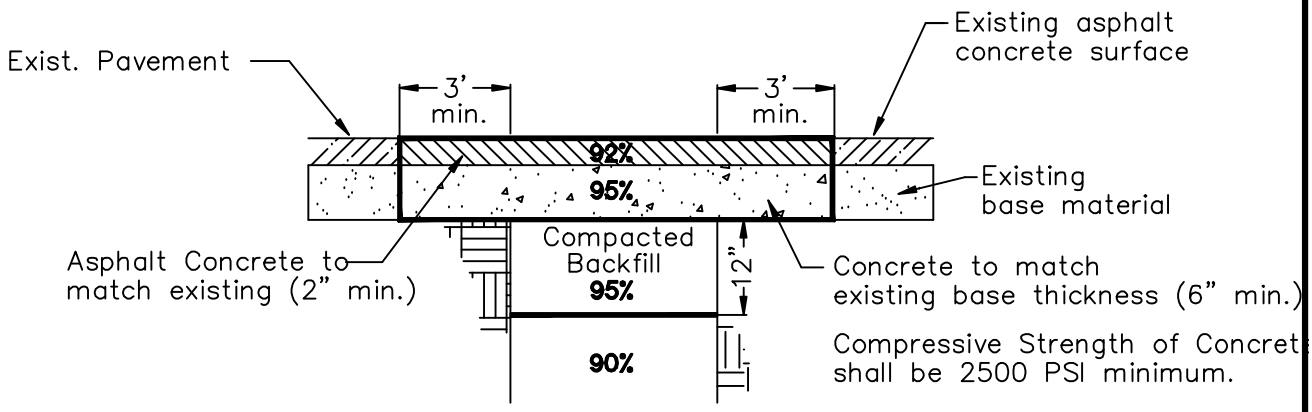


## Type "A" Repair

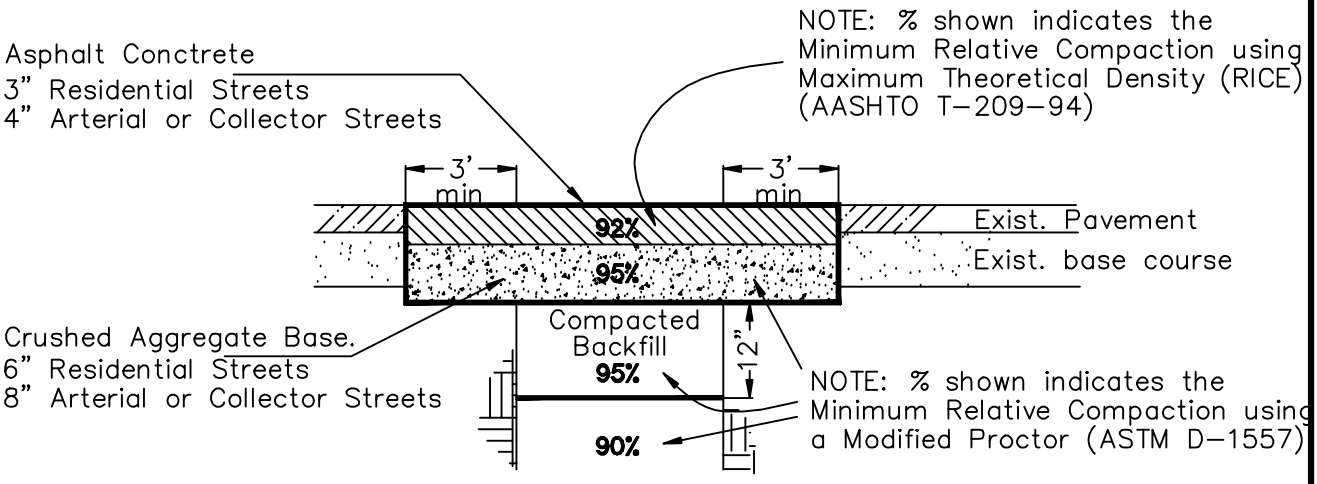


## Type "B" Repair

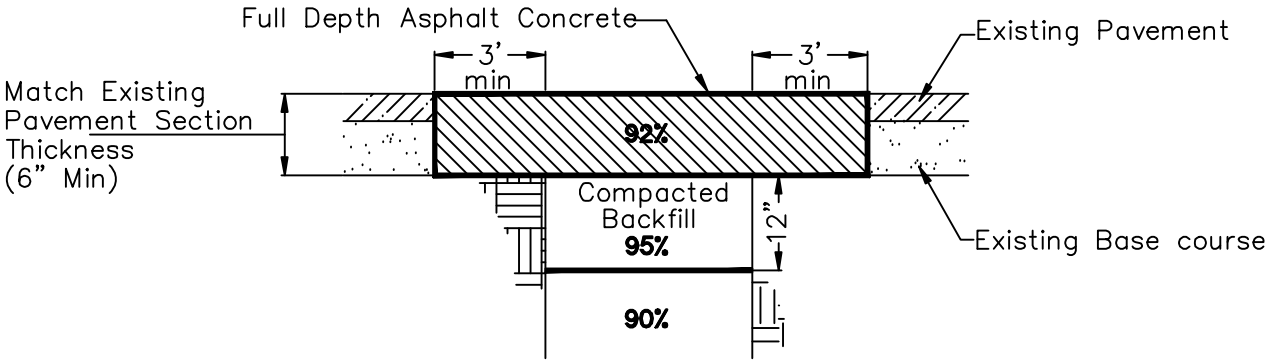


## Type "C" Repair

| REVISION | APPROVED | DATE | CITY OF COEUR d'ALENE STANDARD DRAWING | APPROVED BY: |
|---|---|---|---|---|
| | | | TRENCH CUT PAVEMENT REPAIR | CITY ENGINEER, PE 7432 — DATE: 4/1/08 |
| | | | | DWG NO. M-11 |