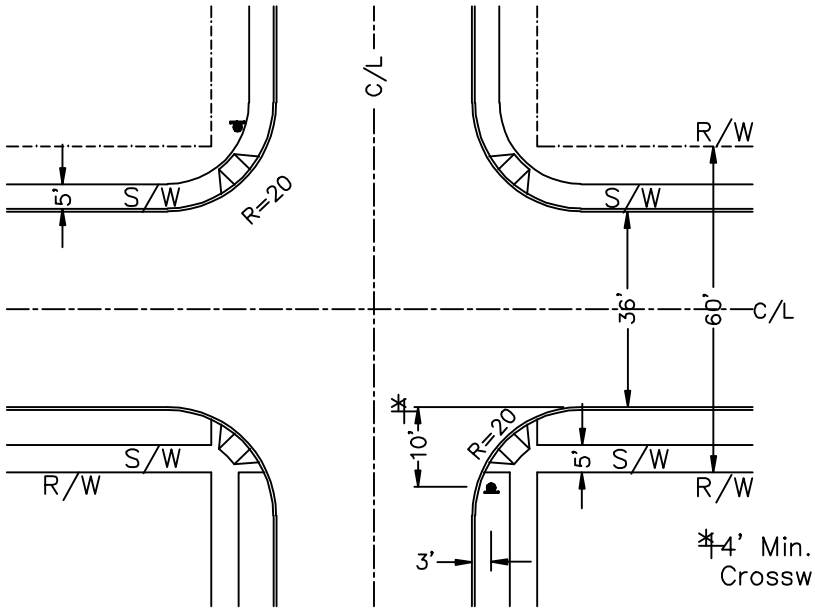

STANDARD INTERSECTION SIGNAGE

No scale

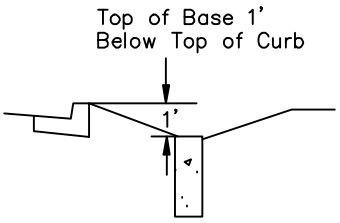

SWALE DETAIL

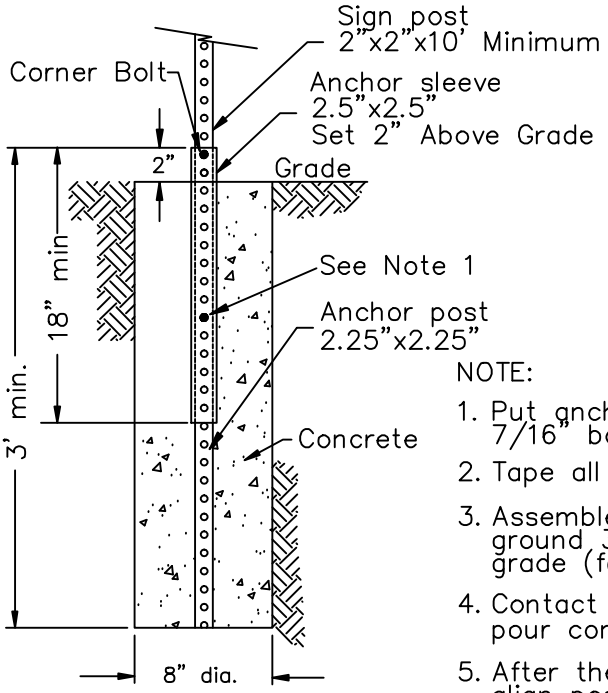

SIGN POST AND BASE INSTALLATION

No scale

TYPICAL POST SIZE *

	Tube Size	Ga./inch
Sign post	2"x2"x10'	12(.105)
Anchor	2.25"x2.25"x36"	12(.105)
Anchor sleeve	2.50"x2.50"x18"	12(.105)

*Use ULTI-MATE only

NOTE:

1. Put anchor and sleeve unit together using 7/16" bolt 12" down from top.
2. Tape all four sides of base unit so concrete can not enter.
3. Assemble sign post and base unit, set base unit into the ground 3'. Leave 2 holes of base unit exposed above the grade (for the bolt connection).
4. Contact City of Coeur d'Alene Sign Shop when ready to pour concrete to install bases.
5. After the concrete has been poured, plumb and align post to 90° of roadway.
6. A minimum of 7' from roadway surface to bottom of sign.
7. See Standard Drawing **M-2** for Sign Details.

REVISION	APPROVED	DATE

CITY OF COEUR d'ALENE STANDARD DRAWING

STREET NAME SIGN LOCATION

APPROVED BY:

CITY ENGINEER, PE 7432

DATE: 4/1/08

DWG NO. M-1